ISSN 2395-1621

Design, Development and analysis of twin motor planetary gear drive for dual speed and safety optimization in hoist application

#1Devshri S. Ashtikar, #2Prof. K.M. Narkar

1devshri.ashtikar@gmail.com
2knarkar@gmail.com

1Department of Mechanical Engineering, D. Y. Patil college of Engineering, Akurdi, Pune, Maharashtra, India.
2Department of Mechanical Engineering, D. Y. Patil college of Engineering, Akurdi, Pune, Maharashtra, India.

ABSTRACT

Many operators and owners of hoists and cranes fear the possible catastrophic damage that can occur if the driving motor of a unit should fail for any reason. This may lead to following: loss of life, damage of goods / property, loss of Production time due to down time of hoist. Hence there is a need of a safety system in advent of failure of the motor that will avoid above damages. In this paper idea of new twin motor hoist system has been put forward. needed to be carried out. The aim of this project is to design and development and analysis of the system parts. For this system parts are theoretically designed and are modeled by using UNIGRAPHICS software and the analysis of these models are carried in the ANSYS software. By using thIS software, results of the designed modeled parts will be compared with Fabricated model.

***Keywords*- Twin motor hoist, planetary gear drive, dual speed**

ARTICLE INFO

Article History

Received :18th November 2015

Received in revised form :

19th November 2015

Accepted : 21st November , 2015

Published online :

22nd November 2015

I. INTRODUCTION

A hoist is a device used for lifting or lowering a load by means of a drum or lift-wheel around which rope or chain wraps. It may be manually operated, electrically or pneumatically driven and may use chain, fibre or wire rope as its lifting medium. The load is attached to the hoist by means of a lifting hook. The following design factors are considered while designing theses systems

A. For electric- or air-powered hoists, load suspending parts of powered hoists shall be designed so that the static stress calculated for the rated load will not exceed 20 percent of the average ultimate material strength .This requirement is commonly reflected by quoting a minimum design factor of 5:1

B. Under normal operating conditions with rated load and under test conditions with test loads up to 125 percent of rated load, the braking system shall perform the further mentioned functions:

a) Stop and hold the load hook when controls are released.

b) Limit the speed of the load during lowering, with or without power, to a maximum of 120 percent of the rated lowering speed for the load being handled.

c) Stop and hold the load hook in the even of a complete power failure.

d) The braking system shall have thermal capacity for the frequency of operation required by the service.

e) The braking system shall have provision for adjustments, where necessary, to compensate for wear.

Considering the above factors it is clear that selection of power rating of single motor is critical

II. LITERATURE REVIEW

In this paper an overall design the hoists generally confirm to IS: 3177 of the hoisting mechanism of an EOT crane has been carried out. Various dimensions for cross sections of various shapes for crane have been found. After the system was designed, the stress and deflection are calculated at critical points using ANSYS and optimized [1]. The problems connected with deep mine hoisting and the increasing complexity of this process can be analyzed

through the application mathematical tools as stochastic modeling to study the effectiveness, reliability or safely of hoist method~. To relate these theoretical investigations to real practice, knowledge about components, their stochastic nature and stochastic order of appearance is necessary. This paper presents results obtained during the period of research undertaken in the Polish mining industry [2]. This paper deals with dual mode power split system Motor control algorithm for a dual power split system is proposed for hybrid electric vehicles (HEV). The dual mode power split system consists of an electric variator, MG1 and MG2, and three planetary gear sets [3]. This paper focuses on hybrid power systems. The topology structures and operating modes of two kinds of Hybrid Power Systems (HPSs) were compared to verify the feasibility of the HPSs and analyze the operating characteristics, in which one is a typical '2-Mode' parallel-series hybrid system, and the other is a novel Anti-Direction-Dual-Rotor electric motor based system[4]. It explains the different areas of research carried out by different authors on Epicyclic gear trains. Study carried out in this research shows the optimization analysis of the epicyclic gear train in INDIA to reduce load failure. The analysis is restricted to the optimization of gear train through load analysis of the gears, pinions and annulus including the sun and plant gears, and finding out the optimal load conditions for the gear train to perform effectively without leading to load failure[5]. STHAL handbook gives the information about all the components used in crane. Also the technologies and programmes used in automated cranes.[6]

III. PROBLEM DEFINATION

Many operators and owners of hoists and cranes fear the possible catastrophic damage that can occur if the driving motor of a unit should fail for any reason.
This may lead to following:
A. Loss of life
B. Damage of goods / property.
C. Loss of Production time due to down time of hoist.

Hence there is a need of a safety system in advent of failure of the motor that will avoid above damages.

IV.PROPOSED DEFINATION

One solution to this problem is to feed the power of two motors of equal rating into a planetary gear drive. This system is proposed with view to offer a dual advantage to the existing single motor system.

a) Safety in case one of the motor fails .
b) Dual speed drives so that same device can cater to more than one application.

SCHEMATIC PROPOSED DIAGRAM

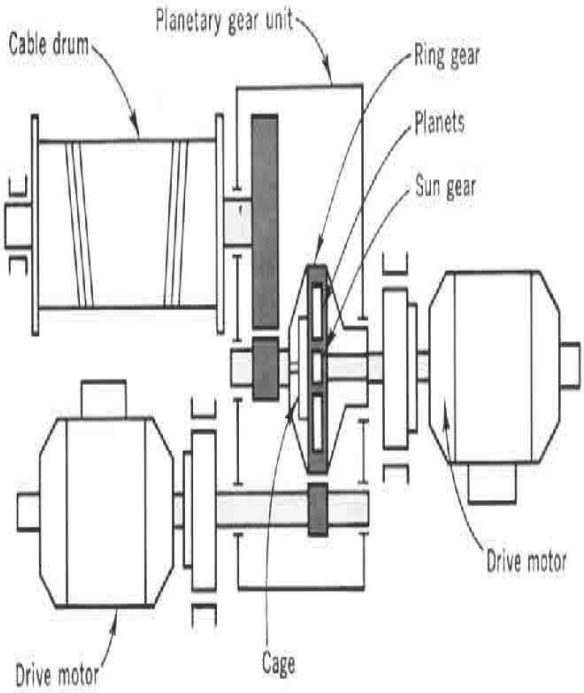

Fig.1 Schematic Proposed Solution

How system offers maximum safety?
Each of the motors is selected to supply half the required output power to the hoisting gear. One motor drives the ring gear, which has both external and internal teeth. The second motor drives the sun gear directly. Both the ring gear and sun gear rotate in the same direction. If both gears rotate at the same speed, the planetary cage, which is coupled to the output, will also revolve at the same speed (and in the same direction). It is as if the entire inner works of the planetary were fused together. There would be no relative motion. Then, if one motor fails, the cage will revolve at half its original speed and the other motor can still lift with undiminished capacity. The same principle holds true when the ring gear rotates. Thus either of the motor is equally capable to drive the given system, so also it is unlikely that both motors should fail at the same time hence the given system offers maximum safety to the hoist .

How dual speed is achieved by the system?
Another advantage is that two working speeds are available as a result of a simple switching arrangement. This makes unnecessary work to shift gears to obtain either speed.

V. OBJECTIVES OF PROJECT

a) Design of mathematical model of the planetary gear drive with twin motor system for optimal load lifting capacity, optimal factor of safety .
b) Derivation of optimal power for individual motor, dual speed mechanism.
c) Development of mathematical model of system of forces, derivation and resolution of system forces by drawing free body diagram of linkage , determination of forces and utilizing system of forces to determine the linkage dimensions of following part

Sun gear	**Planet gear**
Ring gear	**1 st stage**

	input pinion
2 nd stage input pinion	**Planet gear cage**
Output gear	**Hoist drum shaft**

d) Mechanical design of above components using theoretical theories of failure after selection of appropriate materials

- 3-D modelling of set-up using Unigraphix Nx-8.0
- CAE of critical component and meshing using Ansys -i.e. the pre-processing part.
- Mechanical design validation using ANSYS …critical components of the system will be designed and validated
- Validation of strength calculations of critical components using ANSYS i.e. the post processing part for above mentioned parts

e) Creation of Prototype**:**

The selected mechanism and machine along with the damper will be designed using following machines :

- Centre lathe
- Milling machine
- DRO – Jig Boring machine
- Electrical Arc Welding

f) Experimental validation :

The experimental validation part of the hoisting force developed by the twin motor planetary gear system be validated using test-rig developed . Following characteristics will be plotted

- Torque Vs Speed
- Power Vs speed
- Power consumption of individual motor under rated load.
- Power consumption of entire system under rated load
- Dual speed characteristics under determined three step overload.

VI. CONCLUSION

a From the design and analysis results, theoretical modelling of he system achieves the objectives of the project .After analysis these results are compared with experimental results. From all the analysis and experimental results we will conclude with the new twin motor operated hoist system.

ACKNOWLEDGEMENT

First, I would like to express my sincere gratitude toProf. K.M Narkar for his unwavering support and guidance he has provided to me during my Seminar. He has been extremely supportive and understanding.

I would like to express my acknowledgement to concerned subject Faculty members for guiding me in a proper way and for helping me to complete the seminar fruitfully.

REFERENCES

1) Shyam Lal Sharma, Tasmeem Ahmad Khan1, Md. Parvez1 and Kamlesh Kumari, COMPUTER AIDED ANALYSIS AND DESIGN OF HOISTING MECHANISM OF AN EOT CRANE, Intenational journal of Mechanical Engineering And Robotics Research, ISSN 2278 – 0149,Vol. 2, No. 3, July 2013
2) CZAPLICKI, Z.M. Mathematical modelling of the process of hoisting in deep mines, APCOM 87.,Proceedings of the Twentieth International Symposium on the Application of Computers and Mathematics in the Mineral InduSlries. Volume I: Mining. Johannesburg, SAlMM, 1987. pp. 95-97.
3) Namdoo Kim*, Jeongmin Kim*, and Hyunsoo Kim, Control of Dual Mode Power Split Transmission for a Hybrid Electric Vehicle, The World Electric Vehicle Journal, ISSN 2032-6653, Vol 2, Issue 4
4) TAN Di, LUO Yutao*, LIU Yanwei, Comparative Analysis of Two Kinds of Series-Parallel PowerHybrid Systems**,** J Automotive Safety and Energy, 2011, Vol. 2 No. 3
5) Syed Ibrahim Dilawer, Md. Abdul Raheem Junaidi, Dr.S.Nawazish Mehdi, Design, Load Analysis and Optimization of Compound Epicyclic Gear Trains, American Journal of Engineering Research, e-ISSN : 2320-0847 p-ISSN : 2320-0936 Volume-02, Issue-10, pp-146-153
6) STHAL HANDBOOK

